REVISION			
REV.	DATE	DESCRIPTION	DRAWN BY

8ZYCC24P-G16-E256-1
DC 12V 430 RPM
DINGS' MOTION
WORK ORDER
XXXXXX

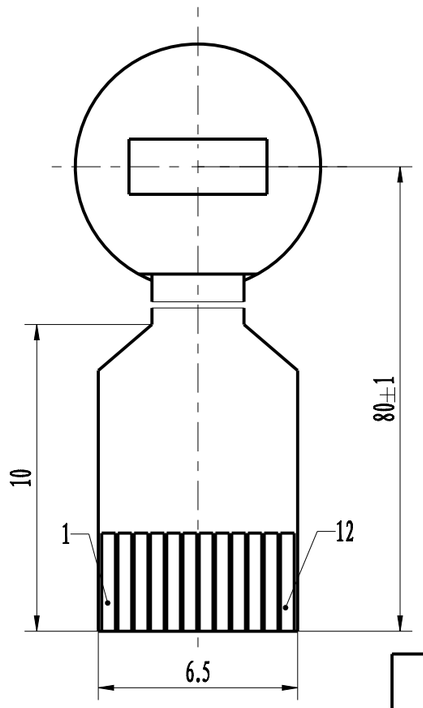

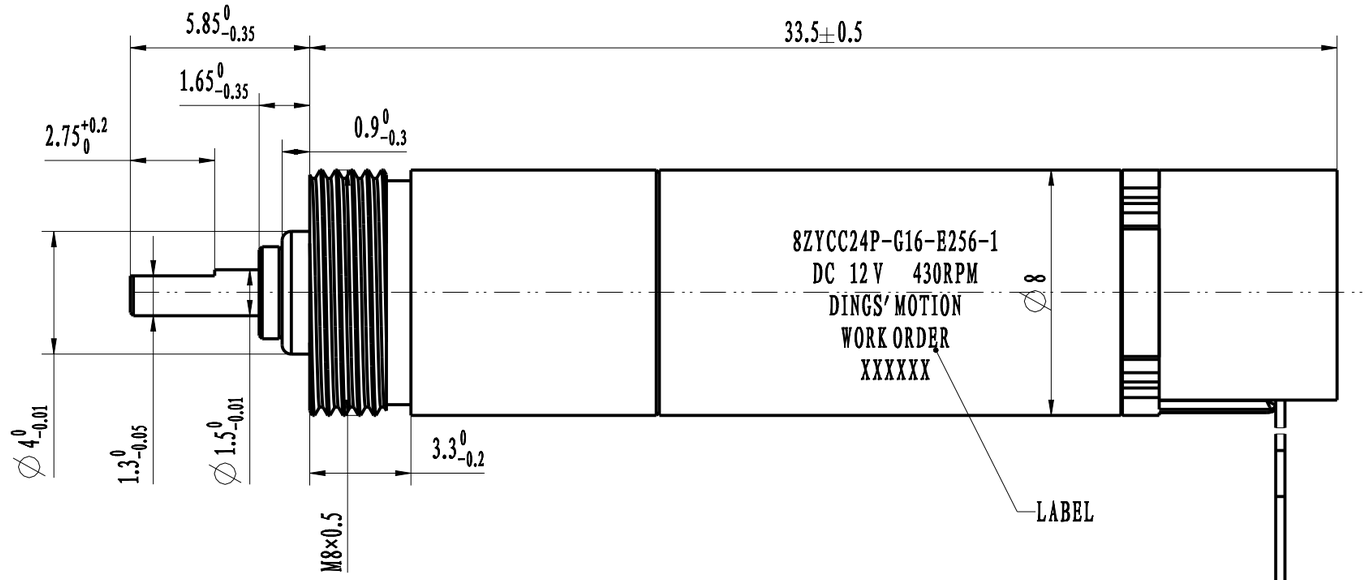

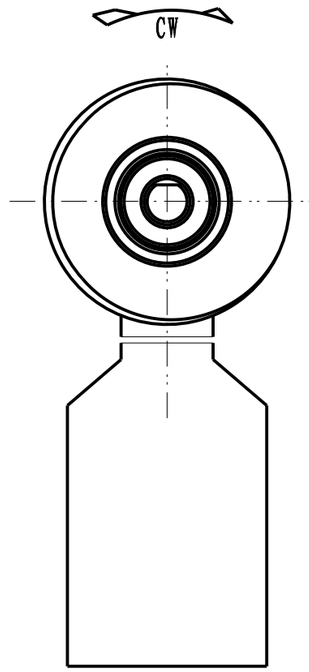

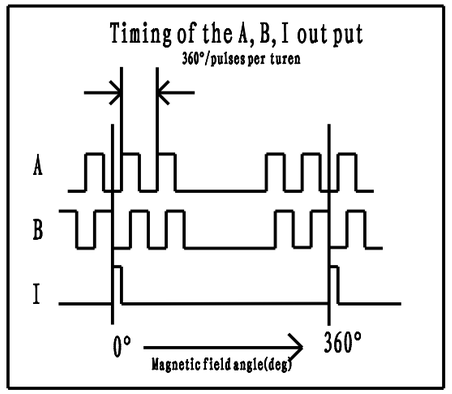

PARAMATER OF MOTOR@25℃		
SUPPLIER VOLTAGE	12	V/DC
GEARBOX RATIO	1:16	
ROTATION(VIEWED FROM SHIFT END)	CW	
NO LOAD SPEED(REF)	730±10%	RPM
NO LOAD CURRENT(REF)	≤30	mA
LOAD SPEED(REF)	430±10%	RPM
LOAD CURRENT(REF)	≤80	mA
TORQUE	6.7	mN.M
POWER	302	mW
WITHSTAND VILATGE	300V AC/50HZ/5mA/1S	
INSULATION RESISTANCE	100/250V	MΩ

WIRING DIAGRAM	
PIN1	MOTOR+
PIN2	MOTOR-
PIN3	NC
PIN4	GND
PIN5	Vcc
PIN6	A
PIN7	B
PIN8	I
PIN9	-
PIN10	-
PIN11	-
PIN12	-

ENCODER		
TYPE	MAGNETIC ENCODE	
NUMBER OF CHANNELS	3	
VOLTAGE	3.3±10%	V
COUNTS PER TURN	2	POLE
OUTPUT CURRENT	-4....4	mA
OUTPUT SIGNAL	INC	
DIRECTION OF ROTATION	A BEFORE B CW	
COUNTS PER TURN	256	
OPERATING TEMPERATURE RANGE	-40℃~100℃	
OUTPUT SIGNAL DRIVER	Single Ended CMOS	

CUSTOMER	
WIRING CHART	Line color line sequence

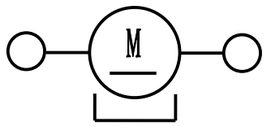

NOTICE TO PERSONS RECEIVING THIS DRAWING
THIS DRAWING IS ONLY CONDITIONALLY ISSUED, AND FOR THE SOLE PURPOSEOF INFORMING LICENSEES AND ASSOCIATE CONTRACTORS OF DINGS' MOTION, AND VENDORS THERETO AND CUSTOMERS THEREOF, RECEIPT OR POCESSION THEREOF DOES NOT CONFERTO TRANSFER ANY RIGHT IN THE SUBJECT MATTER OF THE DRAWING. THE DESIGN, CONSTRUCTION, TECHNICAL INFORMATION AND ALL OTHER SUBJECT MATTER SHOWNIN THISDRAWING ARE AND REMAIN, EXCEPT AS MAY BE OTHERWISE INDICATED BY WRITTENNOTICE HEREON, THE EXCLUSIVE PROPERTY OF SAID CORPORATION. THIS DRAWING MAY BEREPRODUCED ONLY BY LICENSEES AND ASSOCIATE CONTRACTORS OF SAID CORPORATION ANDONLY FOR LICENSED MANUFACTURE, AND BY VENDORS MANUFACTURING FOR SAIDCORPORATION AND ONLY FOR LICENSEES AND ASSOCIATECONTRACTORS.

UNLESS OTHERWISE SPECIFIED ALL DIMENSIONS ARE IN MILLIMETERS AND TOLERANCES ARE AS BELOW

LINERA		ANGULAR	
0~3	±0.2	0~10	±1.5°
3~6	±0.5	10~50	±1°
6~30	±0.8	50~120	±30′
30~120	±1.5	120~400	±15′

DRAWN	Dai	DATE	20251011
CHECK		DATE	
APPRVD		DATE	
COUNTERSIGN		DATE	
MODEL	8ZYCC24P-G16-E256-1-EN		

DINGS

SIZE	A3	SHEET	1/2
SCALE	3:1	REV	A