12ZWWC29T-4_0_0-00WX
DC 6V 12000 RPM
DINGS'MOTION
DATE

铭牌激光打印

变更履历			
修订	日期	描述	已批准
01	2026/02/11	线长变更	刘梦元

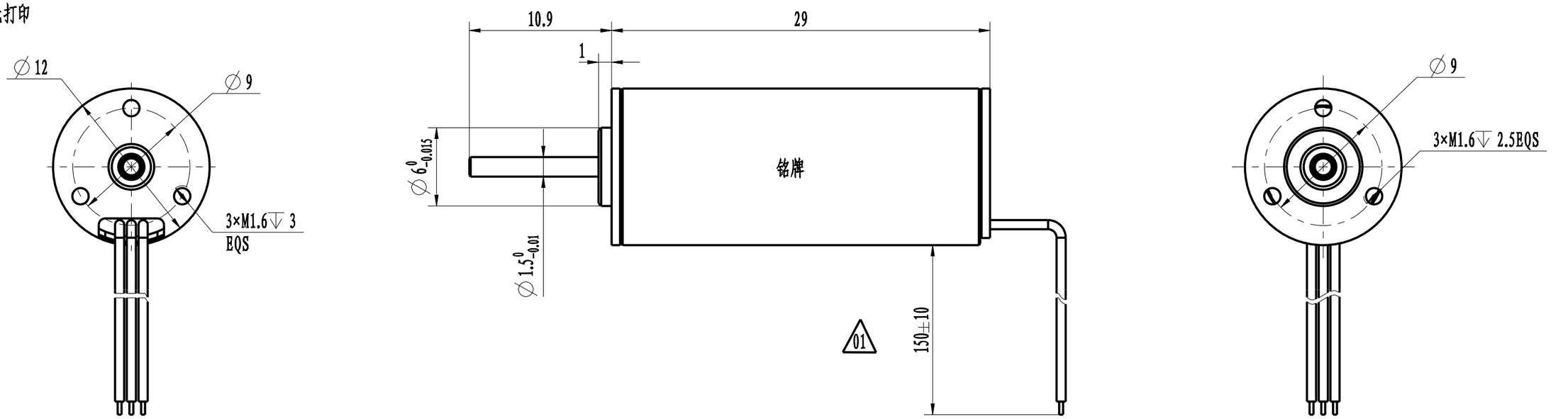

最大效率	69	介电强度	AC 500V,2mA, 1s
极对数	2	绝缘电阻	100MΩ, DC500V
额定电压(VDC)	6	工作制	S2
相间电阻(Ω)	1	电感(mH)	TBD
额定电流(A)	1.22	空载电流(A)	0.16
额定转速(RPM)	12000	空载转速	15000
额定力矩(mN·m)	4	力矩常数(mN·m/A)	3.72
额定功率(W)	5.1	转子惯量(g·cm^2)	0.3
反电势常数(V/RPM)	0.39	机械时间常数(ms)	1.73

客户

电气原理图

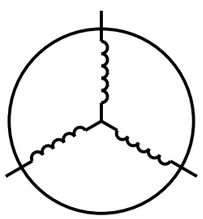

线色线序

线规	电机线	颜色	线规	霍尔线	颜色
AWG 26 UL 3265	绕组U	棕			
	绕组V	黄			
	绕组W	绿			

本电机Pb、Cr(VI+)、Cd、Hg、PBBs、PBDEs、DBP、BBP、DEHP、DIBP 10种物质的含有量满足RoHS要求.
使用注意事项:1.不可拎着电动机引线拿取电机 2.电机引线出口处请不要用外力 3.避免电机落地及碰撞 4.通电状态下不可插拔电机插头
5.电机分解后不可再组装使用 6.在电机的使用过程中若产生有关专利问题本公司不予保证请贵公司特别注意7.电机的转向依据安装面看

除非另外规定,尺寸单位为"mm",公差按如下规定			
线性公差		角度公差	
0~3	±0.2	0~10	±1.5°
3~6	±0.5	10~50	±1°
6~30	±0.8	50~120	±30′
30~120	±1.5	120~400	±15′

设计	刘梦元	日期	20260211
批准	杨佳文	日期	20260211
标准化	于彩云	日期	20260211
会签		日期	
型号	12ZWWC29T-4_0_0-00WX		

江苏鼎智智能控制科技股份有限公司

尺寸	A3	页数	1/2
比例	2:1	版本	B

REVISION			
REV.	DATE	DESCRIPTION	DRAWN BY

12ZWWC29T-4_0_0-00WX
DC 6V 12000 RPM
DINGS'MOTION
DATE

Label laser printing

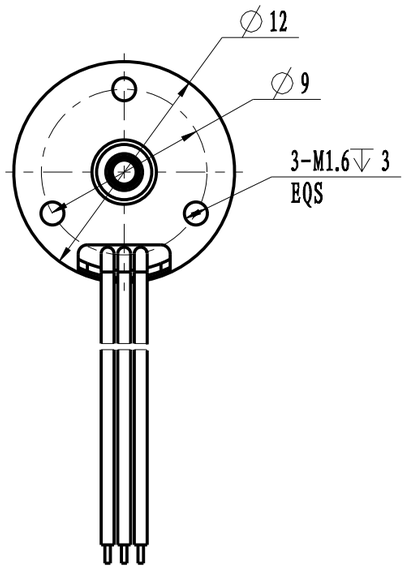

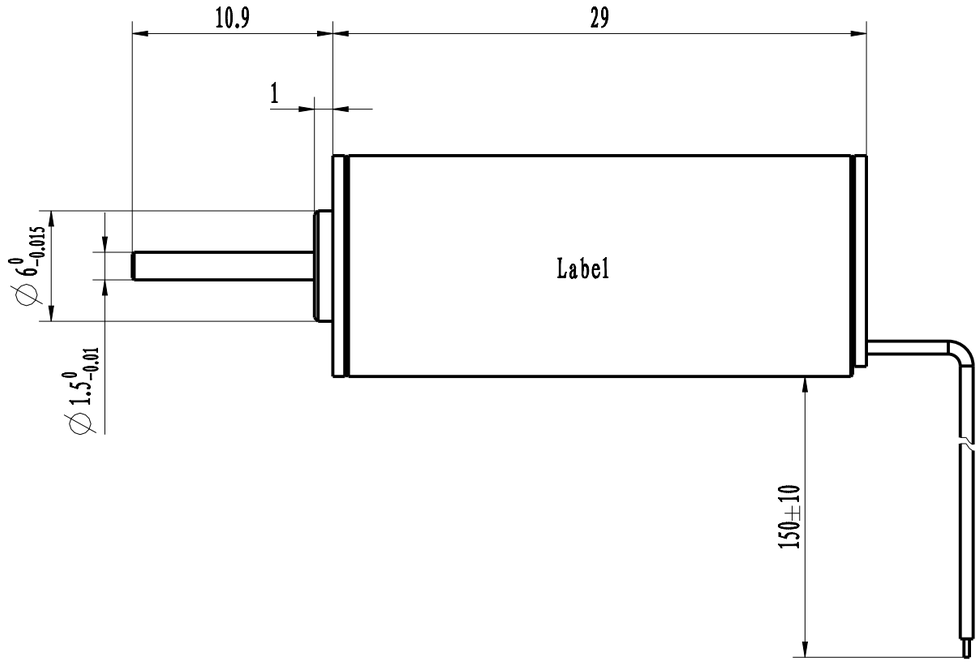

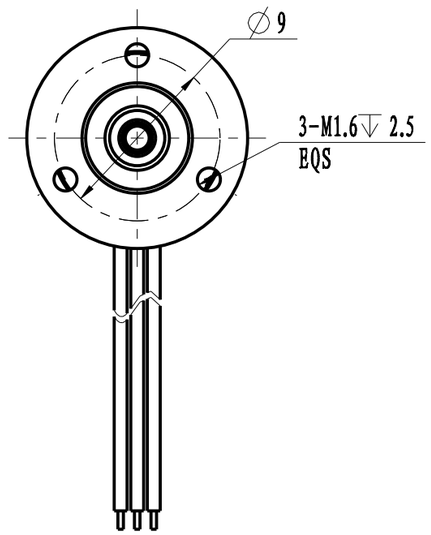

MAXIMUM EFFICIENCY (%)	69	DIELECTRICAL STRENGTH	500VAC,2mA,1s
POLE PAIRS	2	INSULATION RESISTANCE	100 MΩ,500VDC
RATED VOLTAGE(VDC)	6	DUTY TYPE	S2
RESISTANCE(Ω)	1	INDUCTANCE(mH)	TBD
RATED CURRENT(A)	1.22	NO LOAD CURRENT(A)	0.16
RATED SPEED(RPM)	12000	NO LOAD SPEED(RPM)	15000
RATED TORQUE(mN·m)	4	MECHANICAL TIME CONSTANT(ms)	1.73
RATED POWER(W)	5.1	TORQUE CONSTANT(mN·m/A)	3.72
BACK EMF CONSTANT(V/KRPM)	0.39	ROTOR INERTIA($g\cdot cm^2$)	0.3

CUSTOMER

WIRING CHART

Line color line sequence

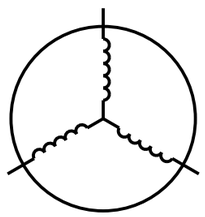

Wire gauge	Motor wire	Wire color	Wire gauge	Hall wire	Wire color
AWG 26 UL 3265	PHASE U	BN			
	PHASE V	YE			
	PHASE W	GN			

NOTICE TO PERSONS RECEIVING THIS DRAWING
THIS DRAWING IS ONLY CONDITIONALLY ISSUED, AND FOR THE SOLE PURPOSE OF INFORMING LICENSEES AND ASSOCIATE CONTRACTORS OF DINGS' MOTION, AND VENDORS THERETO AND CUSTOMERS THEREOF, RECEIPT OR POCESSION THEREOF DOES NOT CONFER TO TRANSFER ANY RIGHT IN THE SUBJECT MATTER OF THE DRAWING. THE DESIGN, CONSTRUCTION, TECHNICAL INFORMATION AND ALL OTHER SUBJECT MATTER SHOWNIN THIS DRAWING ARE AND REMAIN, EXCEPT AS MAY BE OTHERWISE INDICATED BY WRITTEN NOTICE HEREON, THE EXCLUSIVE PROPERTY OF SAID CORPORATION. THIS DRAWING MAY BE REPRODUCED ONLY BY LICENSEES AND ASSOCIATE CONTRACTORS OF SAID CORPORATION AND ONLY FOR LICENSED MANUFACTURE, AND BY VENDORS MANUFACTURING FOR SAID CORPORATION AND ONLY FOR LICENSEES AND ASSOCIATECONTRACTORS.

UNLESS OTHERWISE SPECIFIED ALL DIMENSIONS ARE IN MILLIMETERS AND TOLERANCES ARE AS BELOW

LINERA		ANGULAR	
0~3	±0.2	0~10	±1.5°
3~6	±0.5	10~50	±1°
6~30	±0.8	50~120	±30′
30~120	±1.5	120~400	±15′

DRAWN	刘梦元	DATE	20260211
CHECK	杨佳文	DATE	20260211
APPRVD	于彩云	DATE	20260211
COUNTERSIGN		DATE	
MODEL	12ZWWC29T-4_0_0-00WX		

DINGS

SIZE	A3	SHEET	2/2
SCALE	2:1	REV	